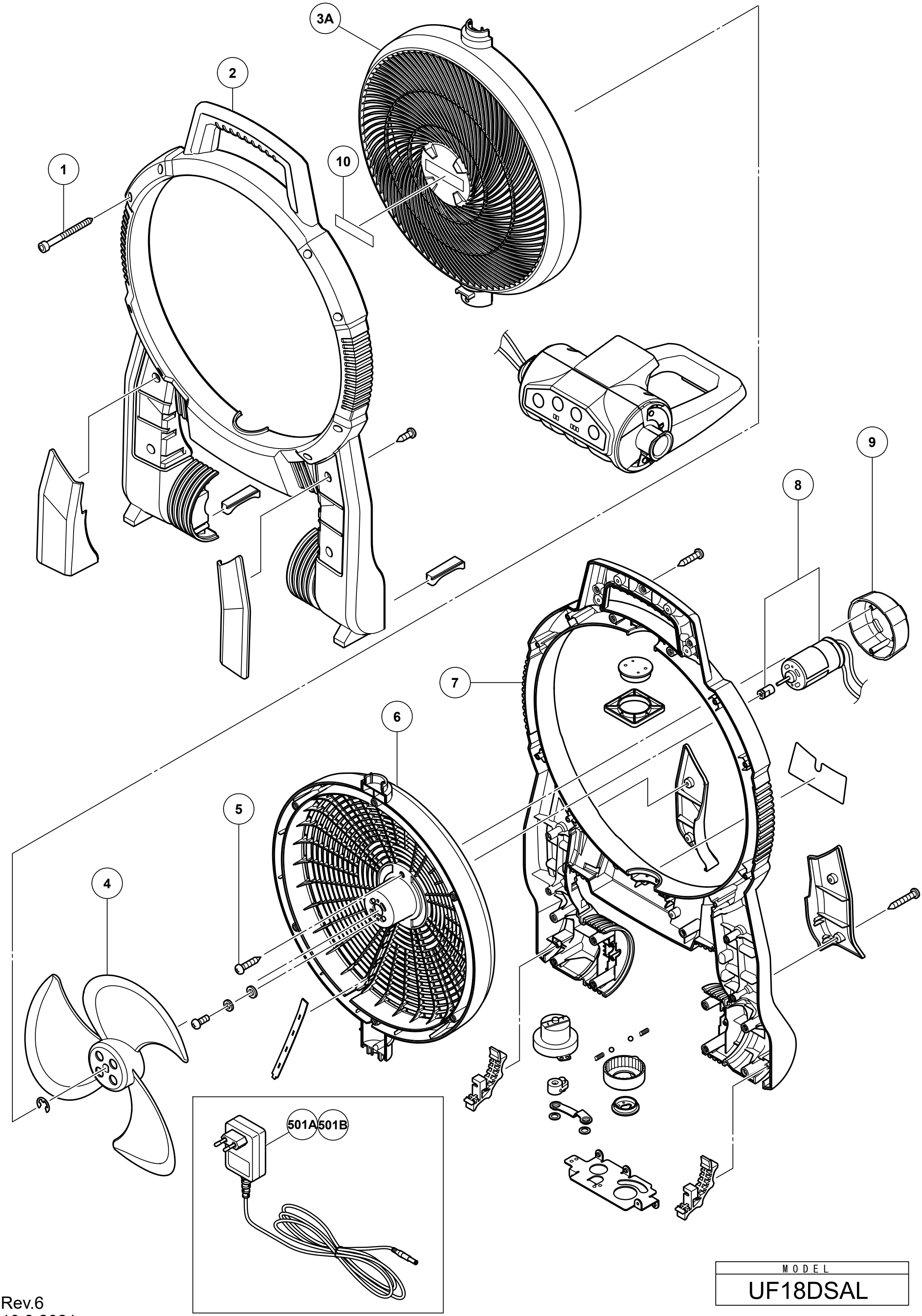

MODEL
UF18DSAL

Rev.6
10.3.2021

HiKOKI

CORDLESS FAN UF18DSAL

Item No.	Code No.	Description	No. Used	Remarks
1	336177	HEX. SOCKET TAPPING SCREW	8	
2	337249	FAN FRONT CABINET	1	
3A	337248	FAN FRONT GRILL	1	
4	336174	FAN BLADE	1	
5	336180	TAPPING SCREW D3	2	
6	337251	FAN REAR GRILL	1	
7	337250	FAN REAR CABINET	1	
8	336179	DC MOTOR	1	
9	336178	MOTOR COVER	1	
10		BRAND LABEL	1	
		STANDARD ACCESSORIES		
*501	336183	AC-ADAPTER (UK)	1	
*501A	377252	AC-ADAPTER (EUROPE)	1	
*501B	376693	AC-ADAPTER (AUS)	1	

* ALTERNATIVE PARTS